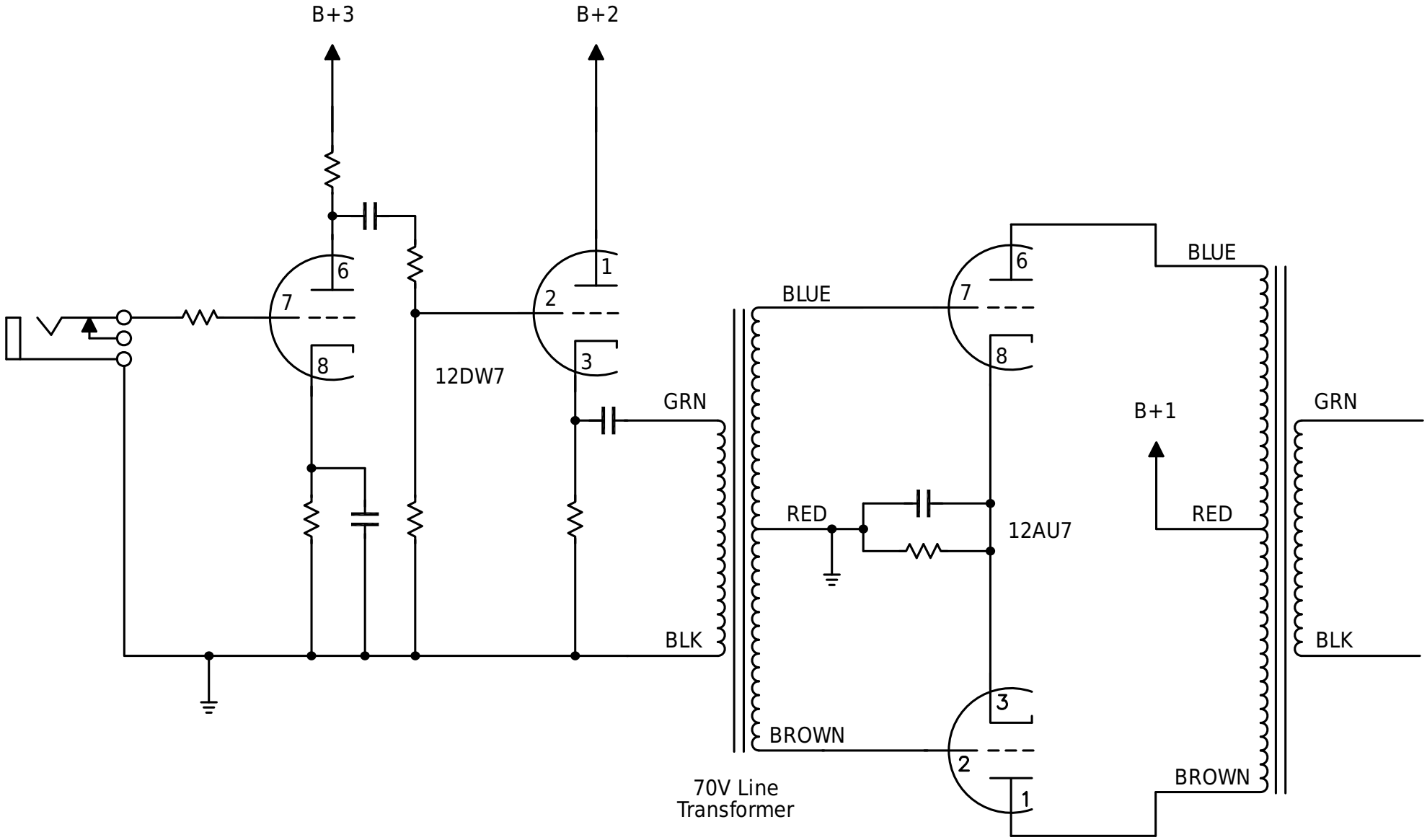

Stephen Keller
14 November 2009
Proposal: Project BETA