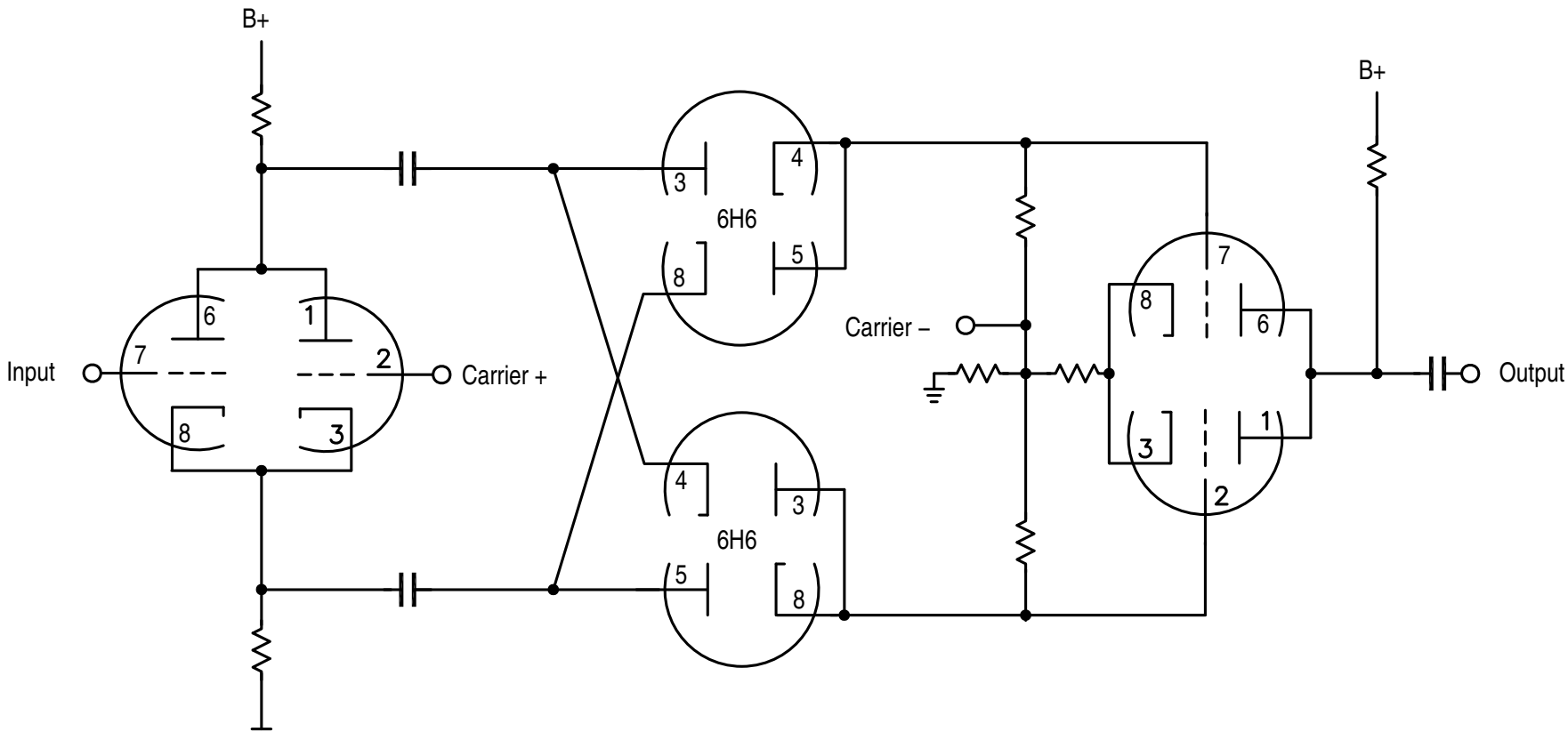
B+
B+
Input
Carrier +
Carrier –
Output
6H6
6H6
1
2
3
4
5
6
7
8